DRWG. STARTED			
DRWG. COMPLETED		12-27-41	
ENG. INF.	SUPP.	REVISED	CK.
L10	77	12-31-41	
L10	360	4-30-42	F.P.

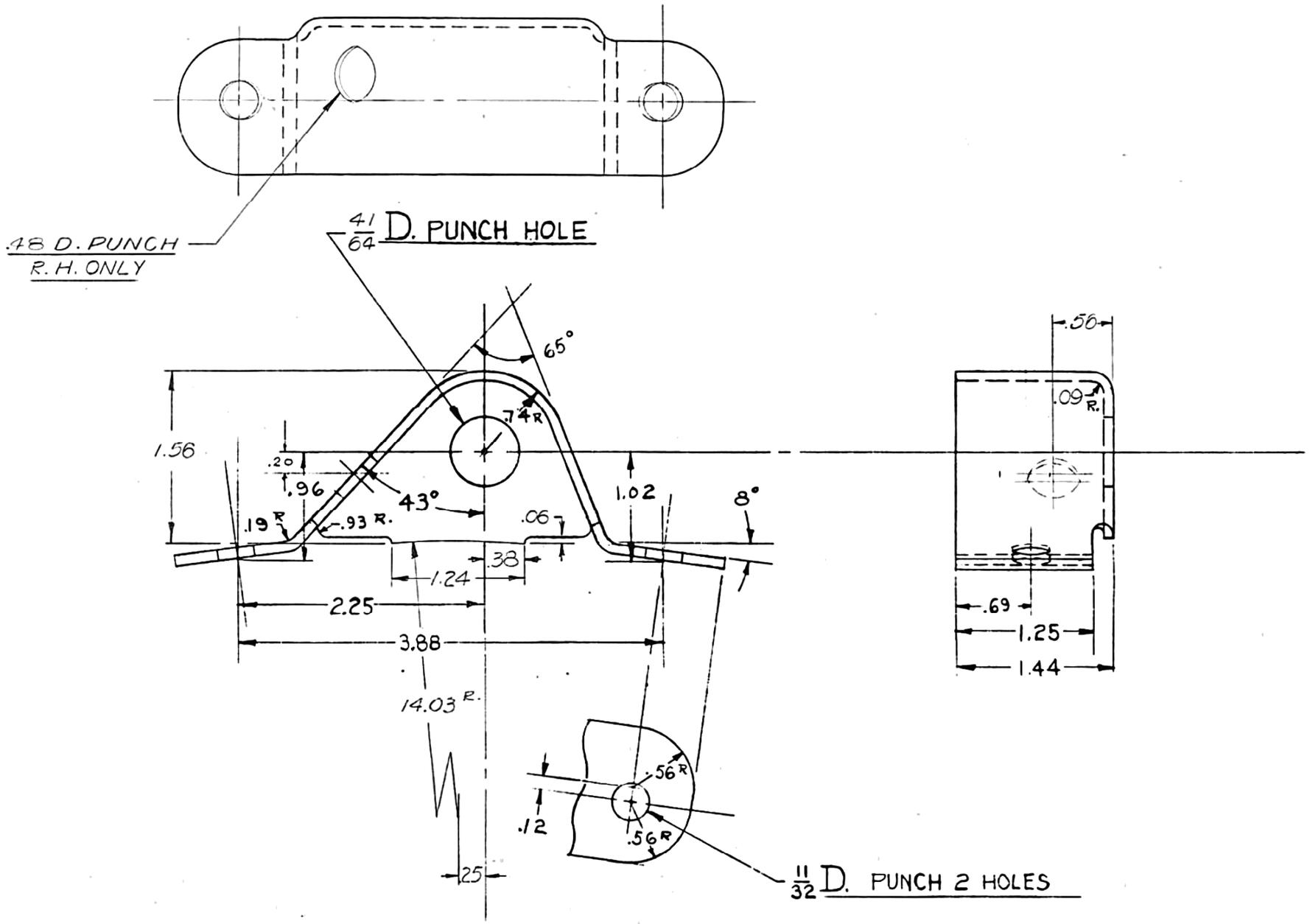

MFG. DPT.
0
N
B
DD
LIN
DAG
BEL
FRA
GER
HOL
SPN.
RUM
ADG
DEN
CORK
NEX
DPA
JAP
AUST
SWLD

BRACKET-FRONT SHOCK ABSORBER
INNER HALF - L.H.
#13(0897) USS GA L.C.O.H H.R.P & O STEEL

PLACE LETTER IN SCRIPT
IN CONVENIENT PLACE

GPW18070	R.H. SYM. OPP.
GPW18071	

DESIGN	SCALE	DRAWN BY	CK.	O.K.	FORD MOTOR CO. DEARBORN, MICH.
	FULL	HOOVEN			

GPW18070
GPW18071