DRWG. STARTED		REDRAWN	
DRWG. COMPLETED		1-19-41	
ENG INF	SUPP.	REVISED	CK.
L10	77	12-31-41	
L10	157	2-6-42	
L10	360	4-30-42	

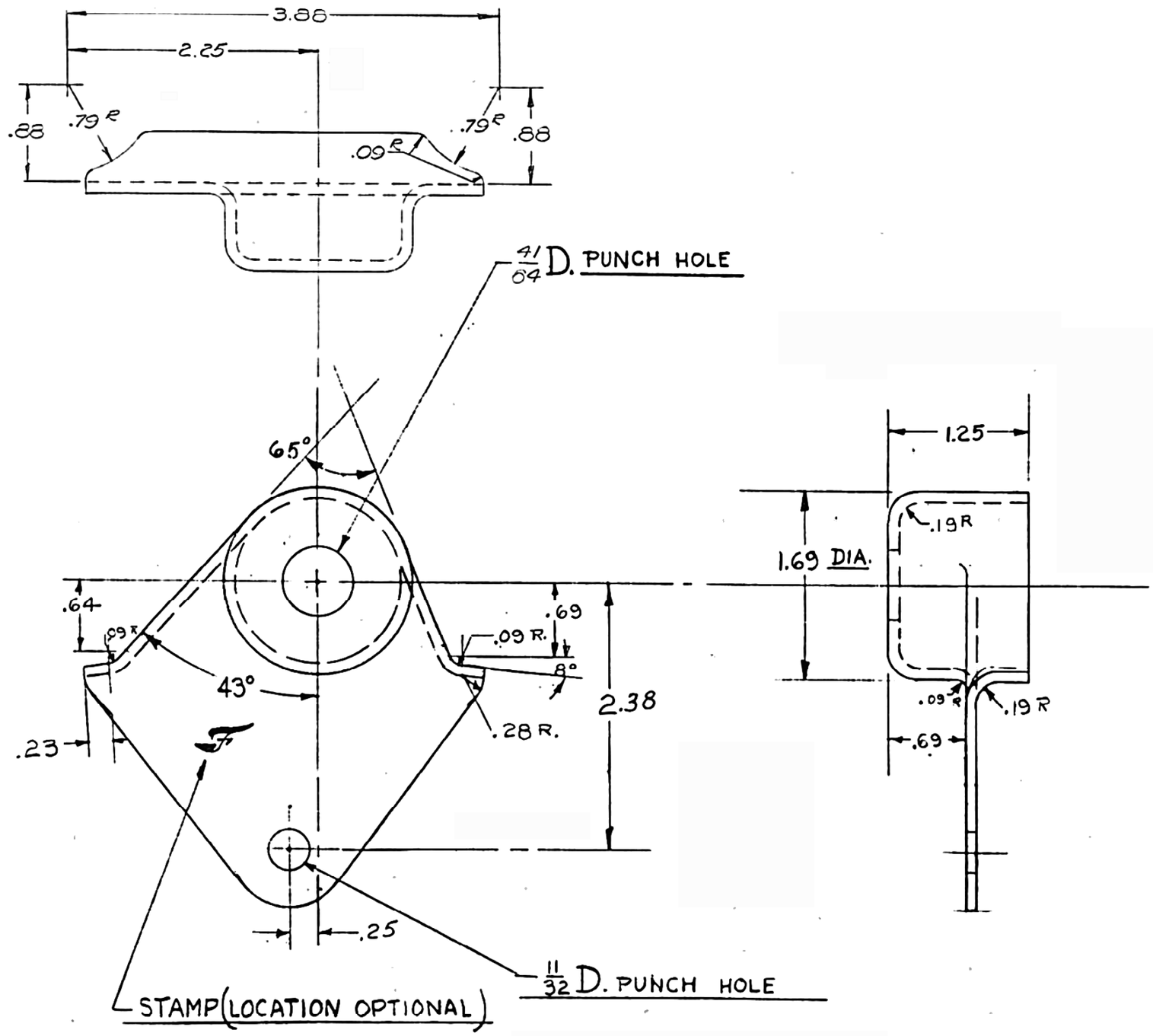

MFG. DPT
M
B
BD
LIN
DAG
BEL
FRA
GER
HOL
SPN
RUM
ARG
DEN
CORK
MEX
BRA
JAP
AUST
SWED

MATERIAL AND NAME

GPW 18072	R.H. SYM OPP
GPW 18073	L.H SHOWN

ALLOWABLE VARIATION ON DIMENSIONS CONTROLLING FINISHED SURFACES IS ±.010 UNLESS OTHERWISE SPECIFIED. ALL DIMENSIONS IN INCHES.

FRONT SHOCK ABS. BR'KT. OUTER HALF.

#13 (0.0897) USS.GA. - LCOH HRP80 STEEL

DESIGN	SCALE	DRAWN BY	CK.	O.K.	FORD MOTOR CO. DEARBORN, MICH.	GPW 18072
	FULL	J.L.H				GPW 18073

MADE IN U.S.A.