GP 2613

ALLOWABLE VARIATION ON DIMENSIONS CONTROLLING FINISHED SURFACES IS ±.010 UNLESS OTHERWISE SPECIFIED. ALL DIMENSIONS IN INCHES.

DRWG. STARTED		12-20-40	
DRWG. COMPLETED		12-20-40	
ENG. INF	SUPP.	REVISED	CK.
K-10	#21	12-31-40	GHC
K-10	#52	1-28-44	P.H.
L-10	1472	1-15-44	Pm

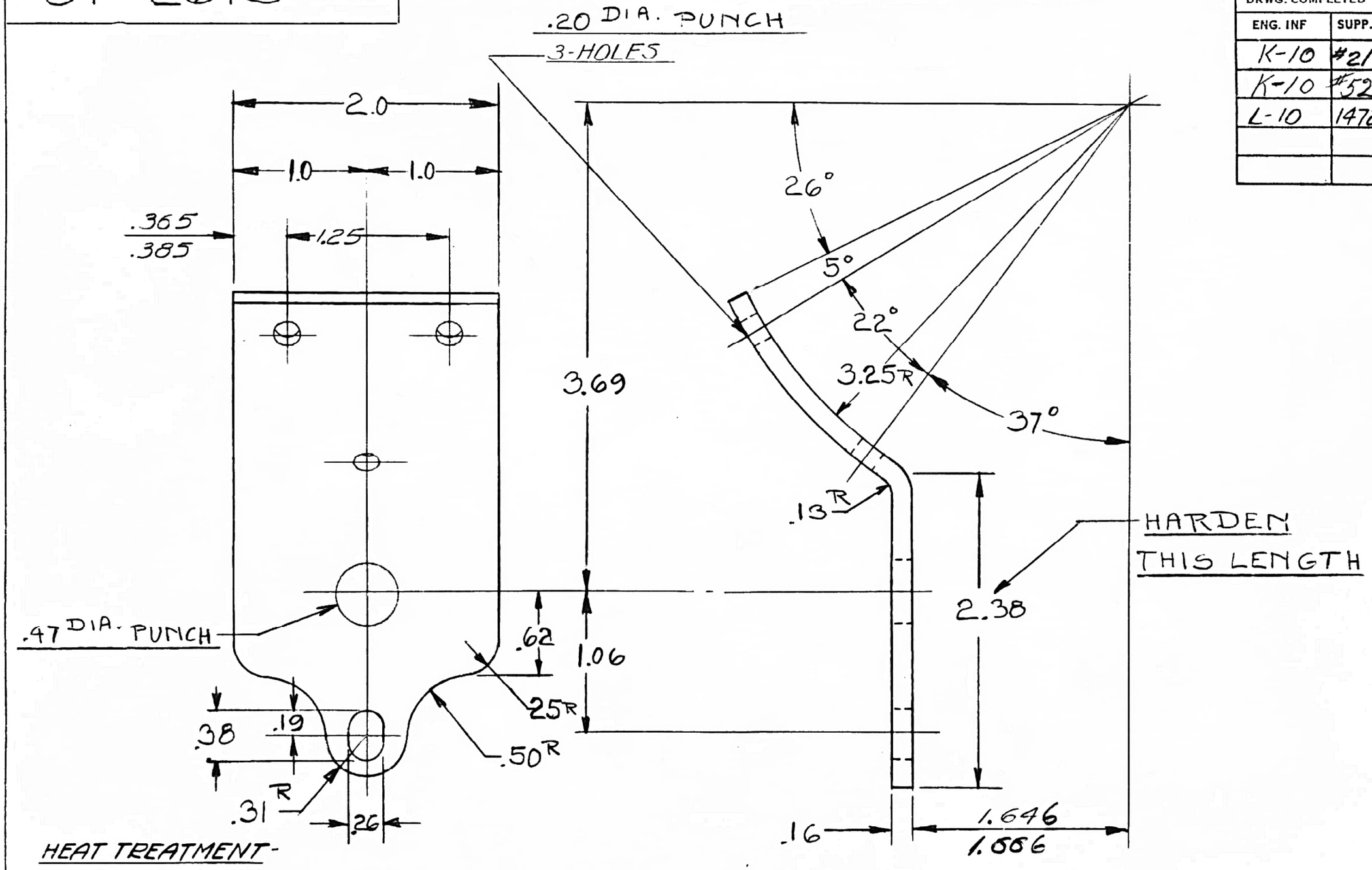

MFG. DPT
LIN
M
S
BD
LIN
DAG
BEL
FRA
CER
HOL
SPN
RUM
ARG
DEN
CORK
MEX
BRA
JAP
AUST
SWED

HEAT TREATMENT-
HEAT IN LIGHT CASE FURNACE
OR LIQUID SALT BATH TO 1560°F.
TO PRODUCE A CASE OF .005 MIN.
QUENCH IN OIL
FILE HARD AS INDICATED

END-HAND BRAKE BAND UPPER

H.R. L.C.O.H. STEEL #9 U.S.S. GA. (.156)

MATERIAL AND NAME

DESIGN	SCALE	DRAWN BY	CK.	O.K.	FORD MOTOR CO. DEARBORN, MICH.	GP 2613
W.G. A-23-4	FULL	Hoth				