GP 9545

ALLOWABLE VARIATION ON DIMENSIONS CONTROLLING FINISHED SURFACES IS ± .010 UNLESS OTHERWISE SPECIFIED. ALL DIMENSIONS IN INCHES.

DRWG. STARTED		REDRAWN	
DRWG. COMPLETED		3-25-41	
ENG. INF	SUPP.	REVISED	CK.
K10	#103	2-25-41	T.N.
K10	#162	4-1-41	T.N.

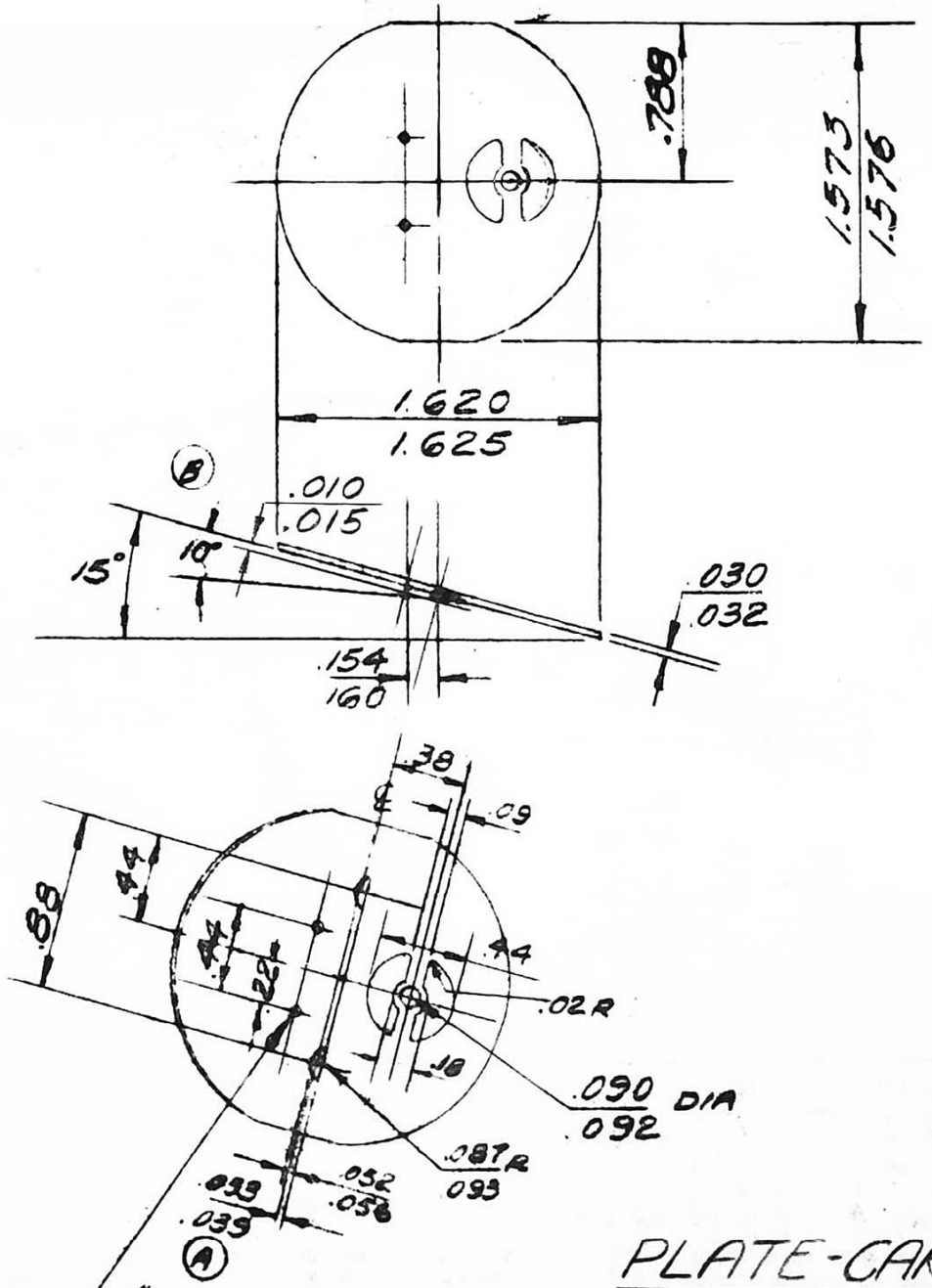

CADMIUM OR ZINC PLATE
SPEC. P-41-B

PLATE-CARBURETOR CHOKE

C.R., L.C., O.H. STEEL

MFG. DPT.
0
M
B
BD
LIN
DAG
BEL
FRA
GER
HOL
SPN.
RUM
ARG
DEN
CORK
MEX
BRA
JAP
AUST
SWED

MATERIAL AND RAWS

2R-21

DESIGN	SCALE	DRAWN BY	CK.	O.K.	FORD MOTOR CO. DEARBORN, MICH.	GP 9545
HOLLEY	FULL	WOFFSINGER				